REVISIONS					
ECN	REV.	BY	DESCRIPTION	DATE	APPROVED
	3	MAD	ADDED TOLERANCES - DELETED NOTE	2/7/2000	

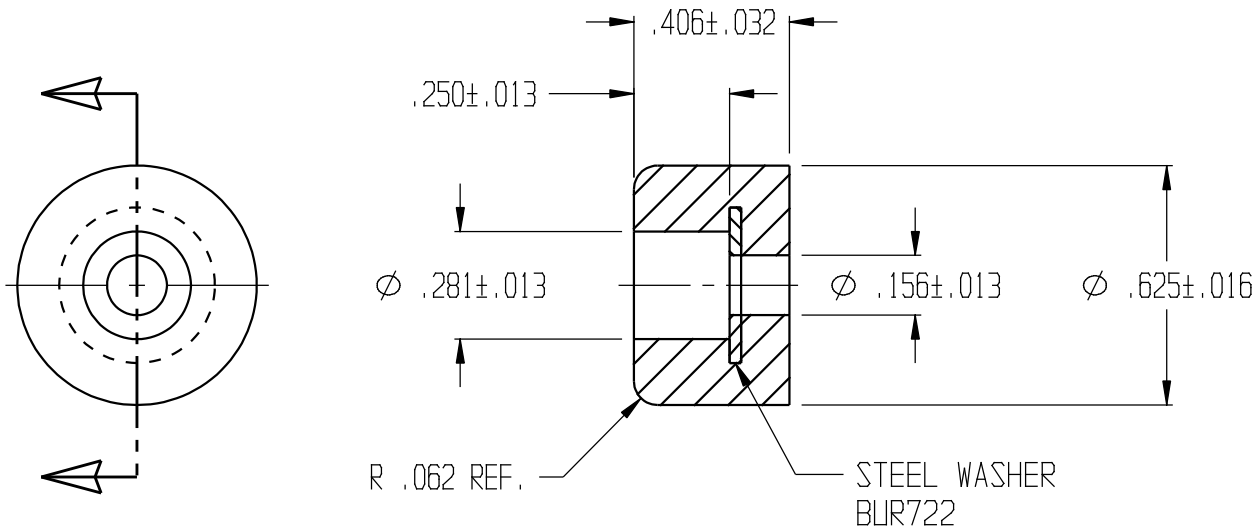

UNLESS OTHERWISE SPECIFIED
DIMENSIONS ARE IN INCHES

TOLERANCES ARE
DECIMALS MM ANGULAR

LAVELLE IND., INC.
665 McHENRY St. BURLINGTON, WISC. 53105
Ph. 262/763-2434 Fax 262/763-5607

TITLE	RECESS BUMPER		
MATERIAL	F57006	SHEET 1	OF 1
SIZE A	SCALE 2x	PART NO. 733RW	REV. 3
FILE PATH W:\CAD FILES\Cadkey\	parts\stock\recssbpr\733rw.prt		

DRAWN M A DEAN	DATE 3/20/96
CHECK	DATE
DESIGN	DATE