REVISIONS					
REV.	ZONE	BY	DESCRIPTION	DATE	APPROVED
4		MAD	REDRAWN TO CADKEY	8/22/97	
5		MAD	ADDED REF. TO R .312 DIM.	3/11/98	

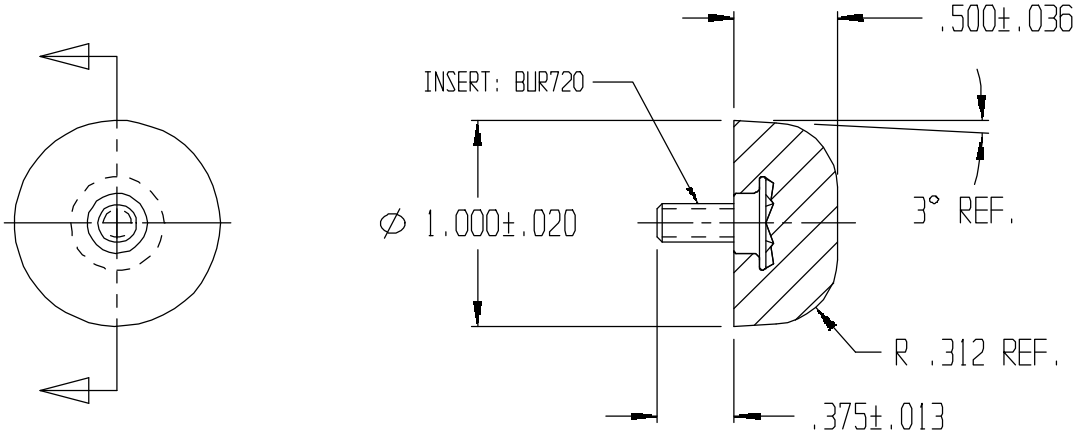

UNLESS OTHERWISE SPECIFIED
DIMENSIONS ARE IN INCHES

TOLERANCES ARE
DECIMALS MM ANGULAR

DRAWN M A DEAN	DATE 1/6/93
CHECK	DATE
DESIGN	DATE

LAVELLE IND., INC.
665 McHENRY St. BURLINGTON, WISC. 53105

TITLE: MACHINE SCREW BUMPER

MATERIAL: F57014 | SHEET 1 OF 1

SIZE: A | SCALE: 1X | PART NO. 1MSB | REV. 5

FILE: g:\cadkey\parts\stock\bumpers\1msb.prt