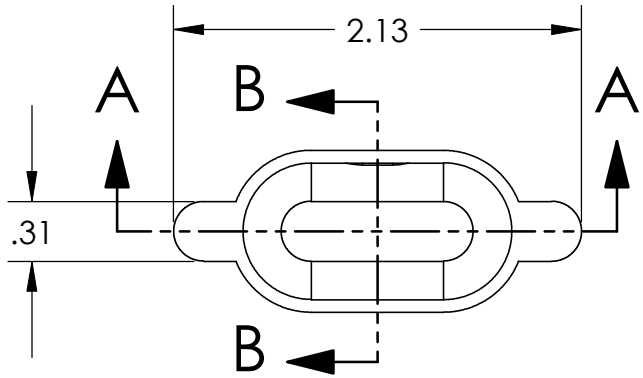

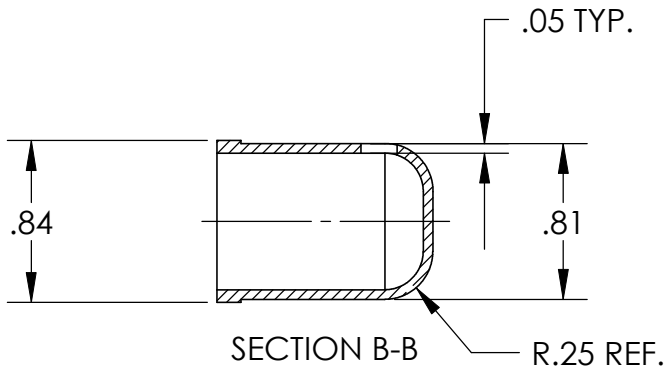

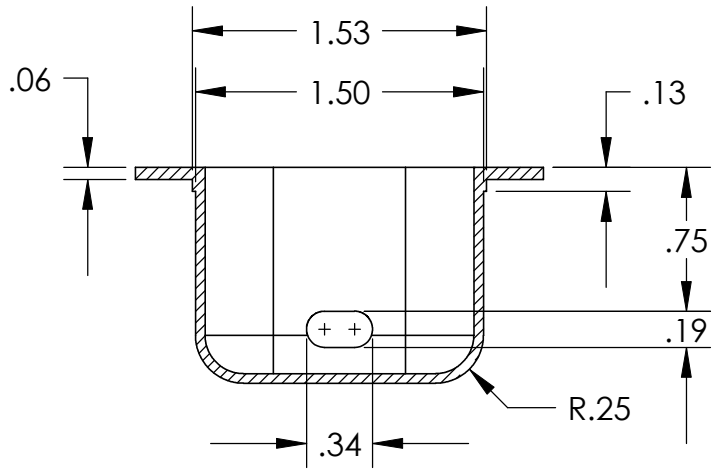

SECTION A-A

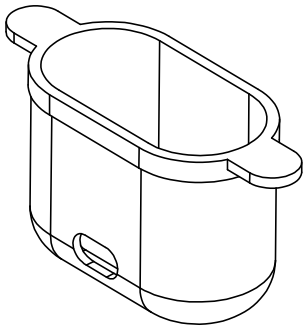

VOLUME: .25in^3

UNLESS OTHERWISE SPECIFIED:		NAME	DATE	Lavelle Industries, Inc.
DIMENSIONS ARE IN INCHES TOLERANCES: RMA CLASS A3 COMMERCIAL	DRAWN	MAD	12/04/09	TITLE:
	CHECKED			CAPACITOR BOOT
	ENG APPR.			
	MFG APPR.			
INTERPRET GEOMETRIC TOLERANCING PER:	**PROPRIETARY AND CONFIDENTIAL**			
MATERIAL F65024	THE INFORMATION CONTAINED IN THIS DRAWING IS THE SOLE PROPERTY OF LAVELLE INDUSTRIES, INC. ANY REPRODUCTION IN PART OR AS A WHOLE WITHOUT THE WRITTEN PERMISSION OF LAVELLE INDUSTRIES, INC. IS PROHIBITED.			SIZE A / DWG. NO. M8066 / REV
DO NOT SCALE DRAWING				SCALE: 1:1 / WEIGHT: / SHEET 1 OF 1

FILE PATH - N:\CAD\PARTS\STOCK\Syntex\M8066\M8066.slddrw

5 4 3 2 1